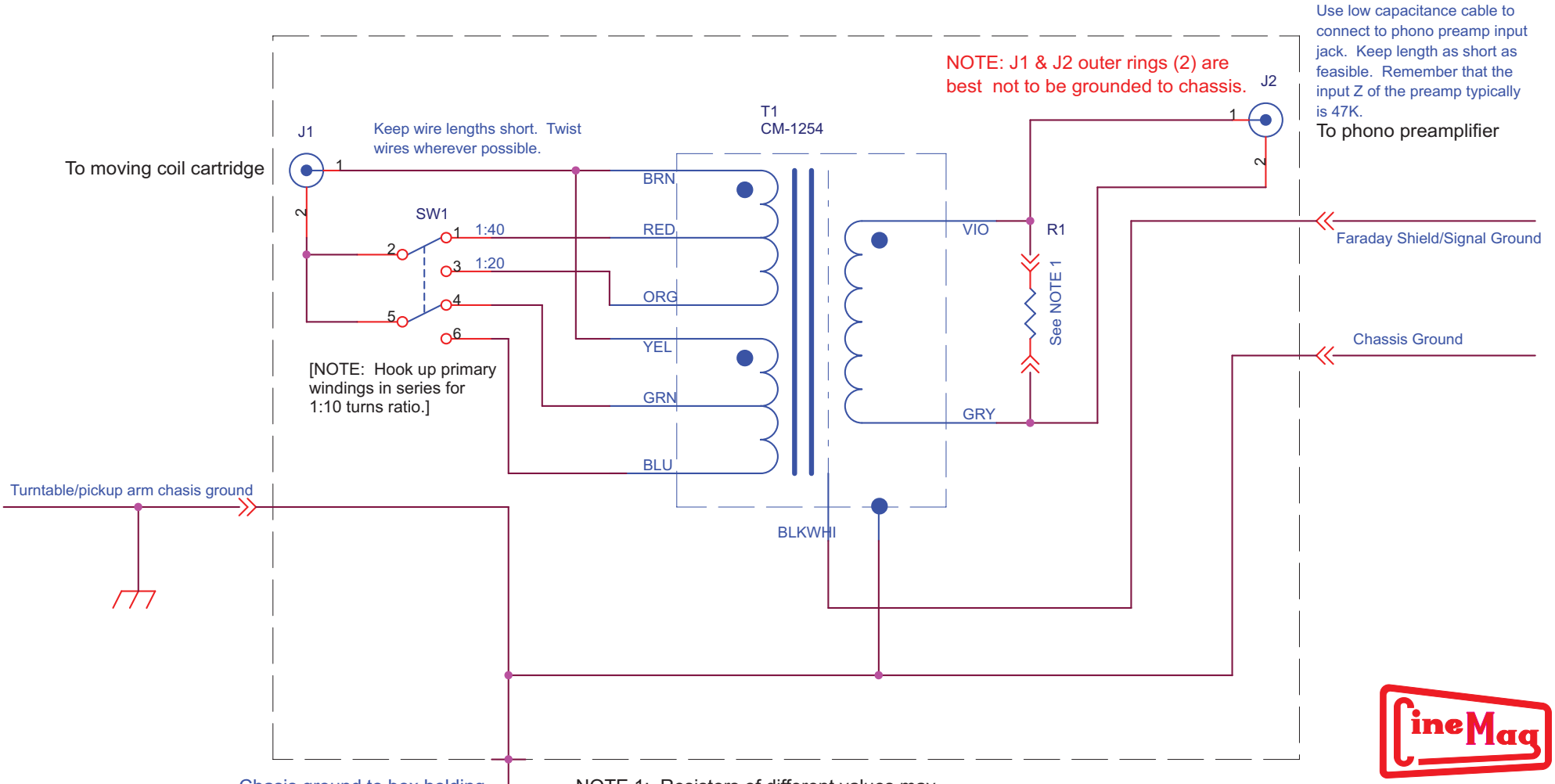

NOTE 1: Resistors of different values may be tried for R1 to reflect to the primary the desired loading impedance without harming the transformer or MC cartridge.

Title	CM-1254 Moving Coil Hookup
Size A	
Date:Sheet Sunday, June 23, 2013	11 of